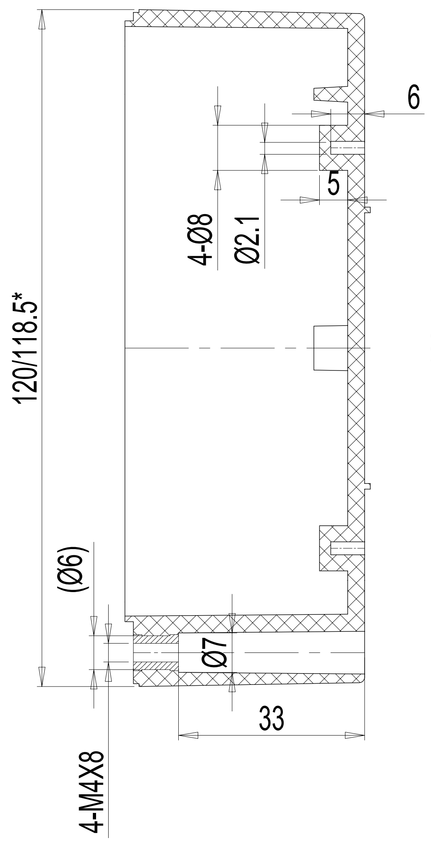

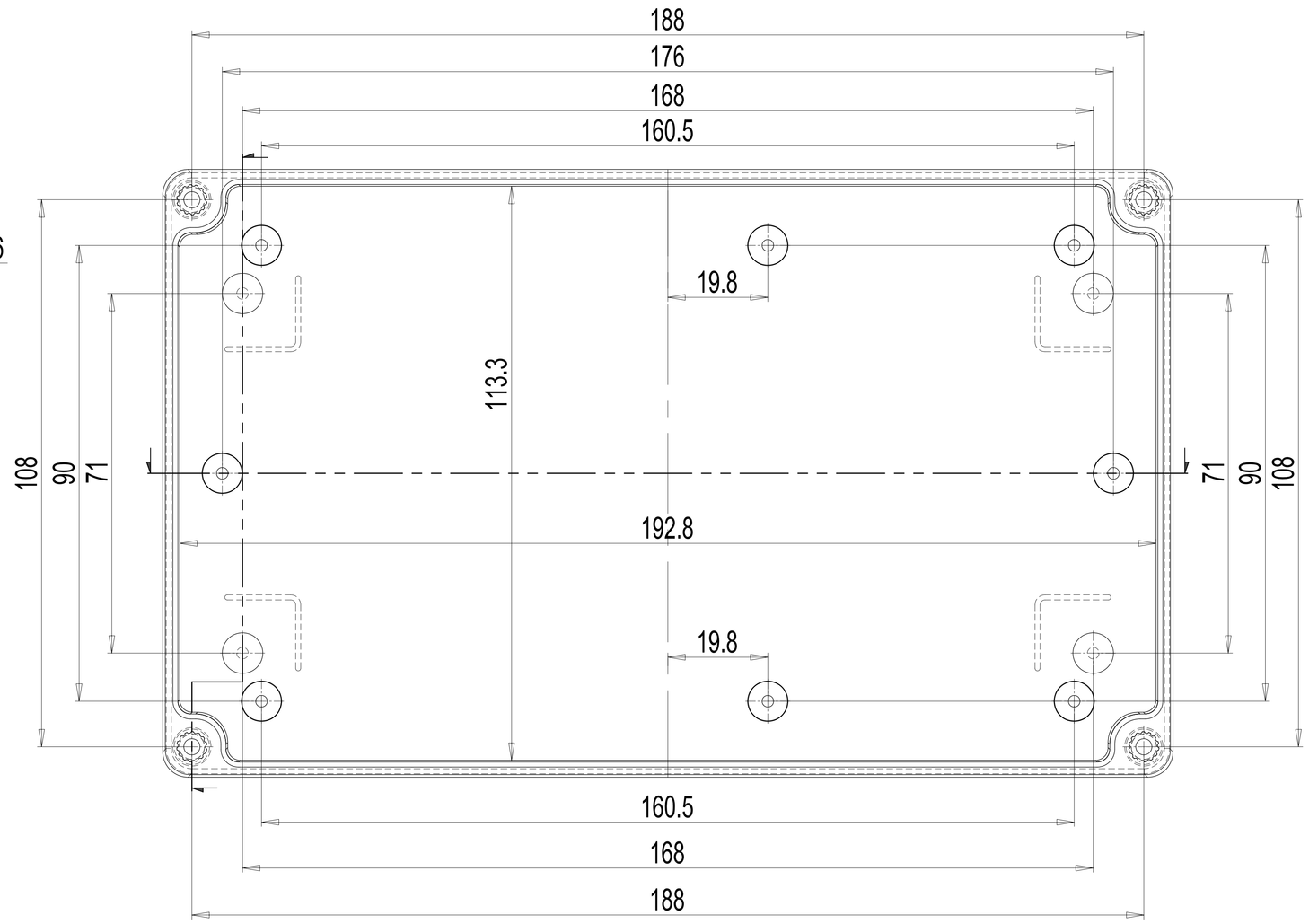

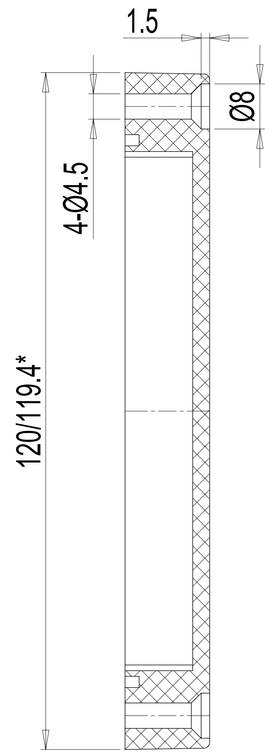

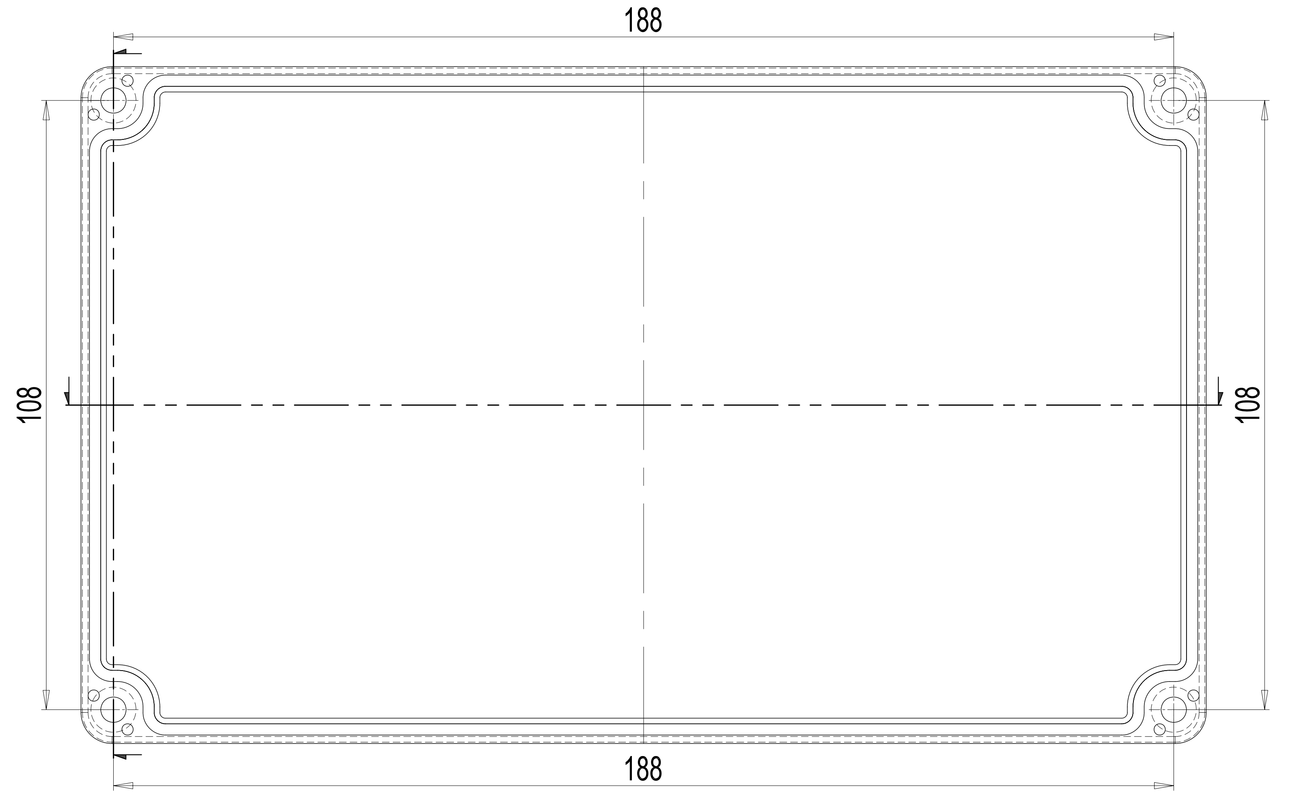

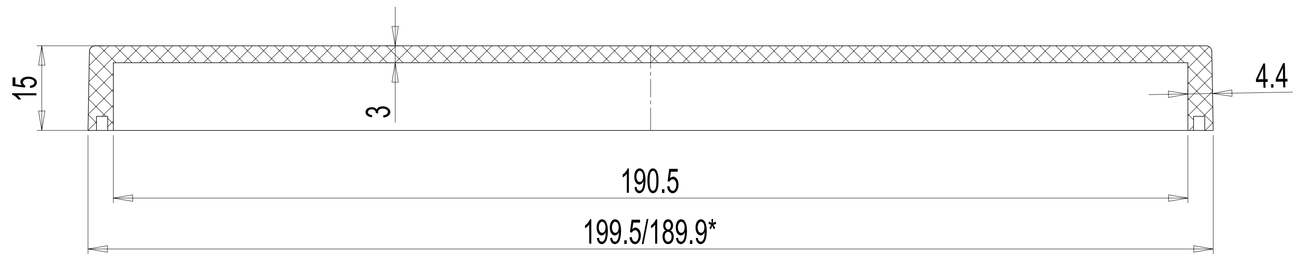

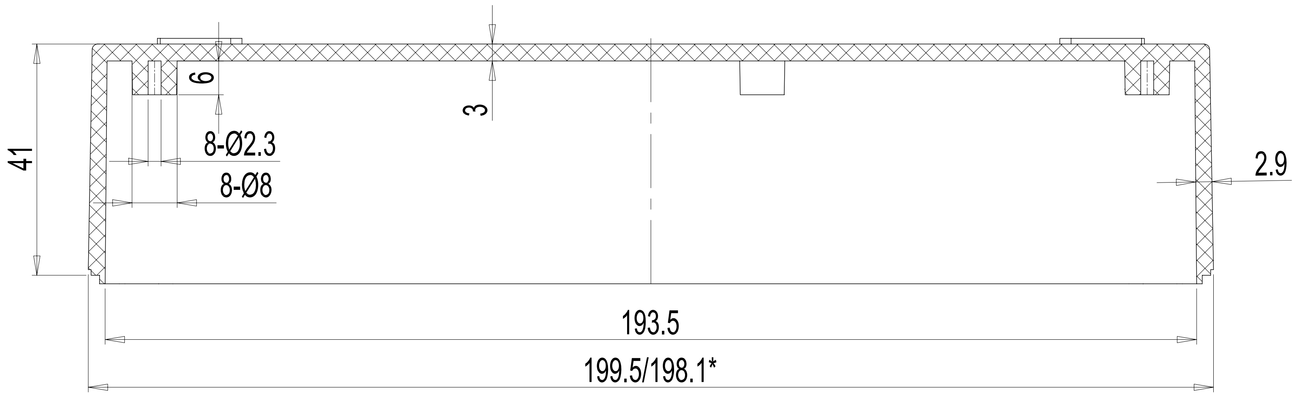

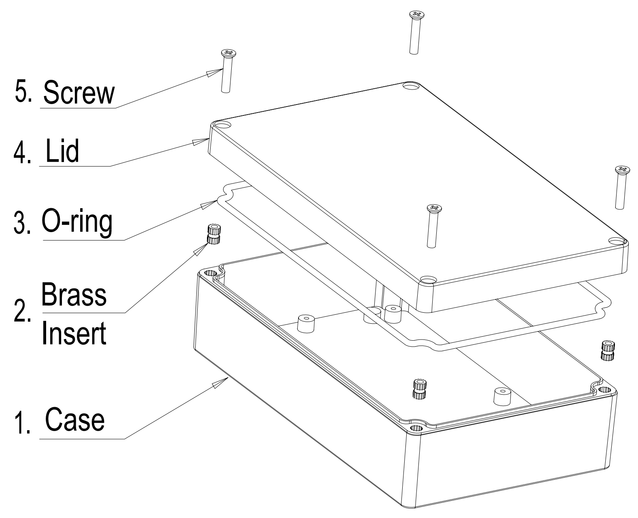

NOTICE

1. * Measures are reduced to below because the draft tolerance after GTA13/5 DIN16901-130;
2. Unmarked Draft 2°.

No.	Name	Qty.	Size	Material
5	Screw	4	M4X20 (DIN 965)	Stainless Steel
4	Lid	1	200X120X15	ABS
3	O-ring	1	Ø3X630	PU
2	Insert	4	M4X8	Brass
1	Case	1	200X120X43.5	ABS

Index (Customer)	REV	Name	Date	Index (FUXIN)	REV	Name	Date

FUXIN
Metal Processing Co.,Ltd

Scale: Free
Volume: mm³
Weight: 0.266 Kg
Original Material: ABS
Chinese Material:

Tolerances: DIN16901 - 130
Treatment:

Part Name :
FUP 200 X 120 X 057

Drawing Number :
FUP 200 X 120 X 057

Designer	Liu Junbin	2009.12.11
Technician		
Quality department		

Sheet 1 of 1