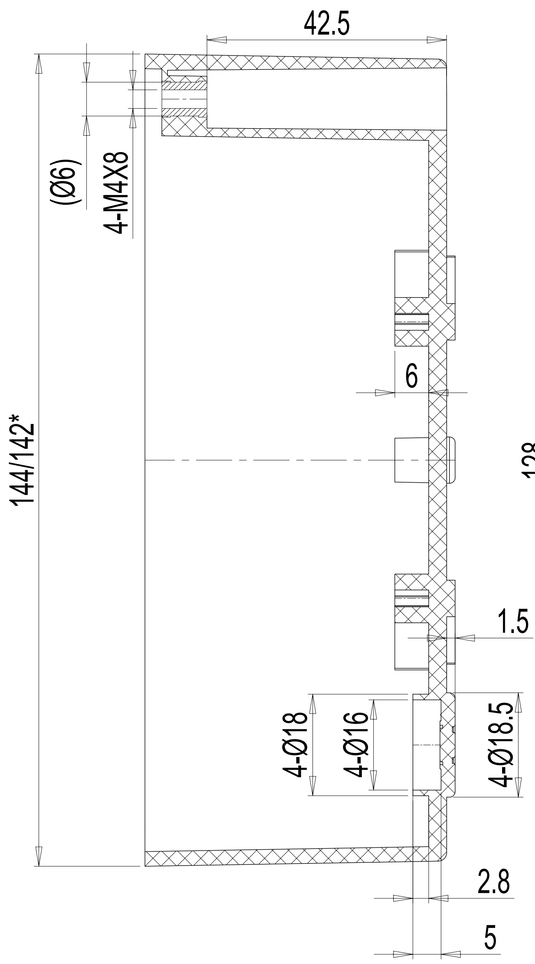

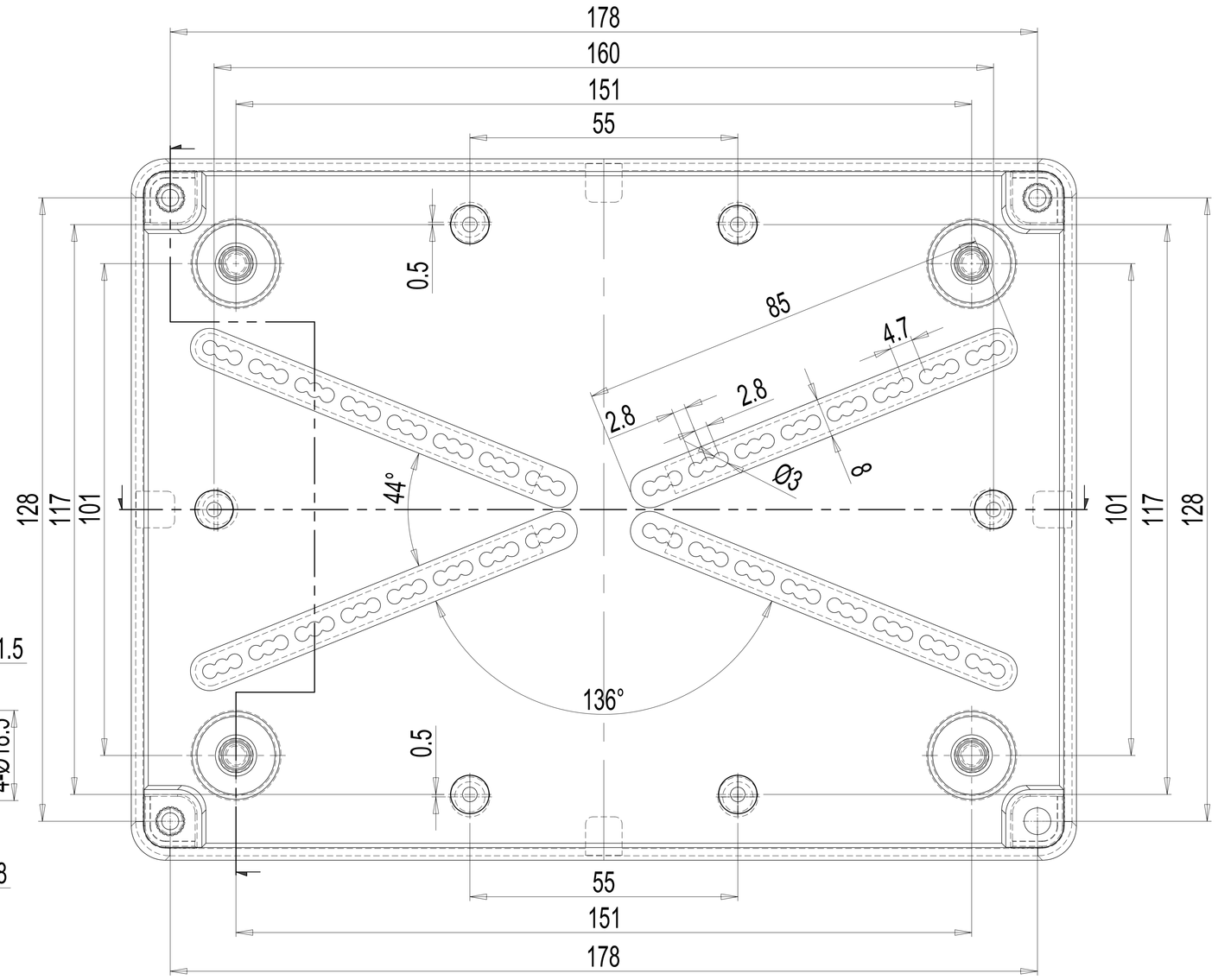

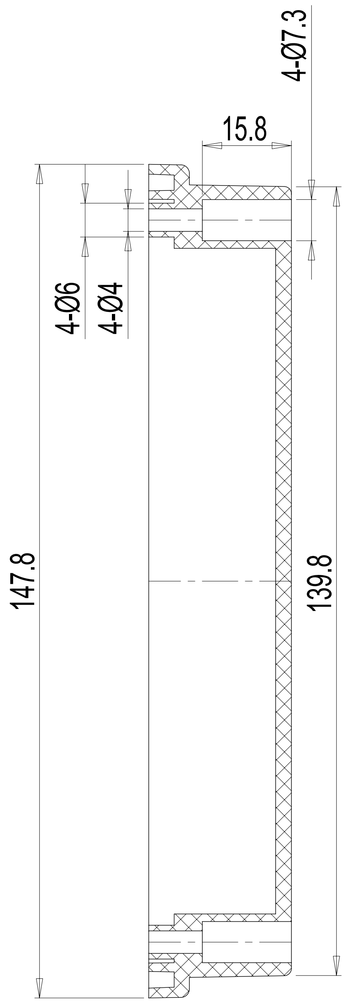

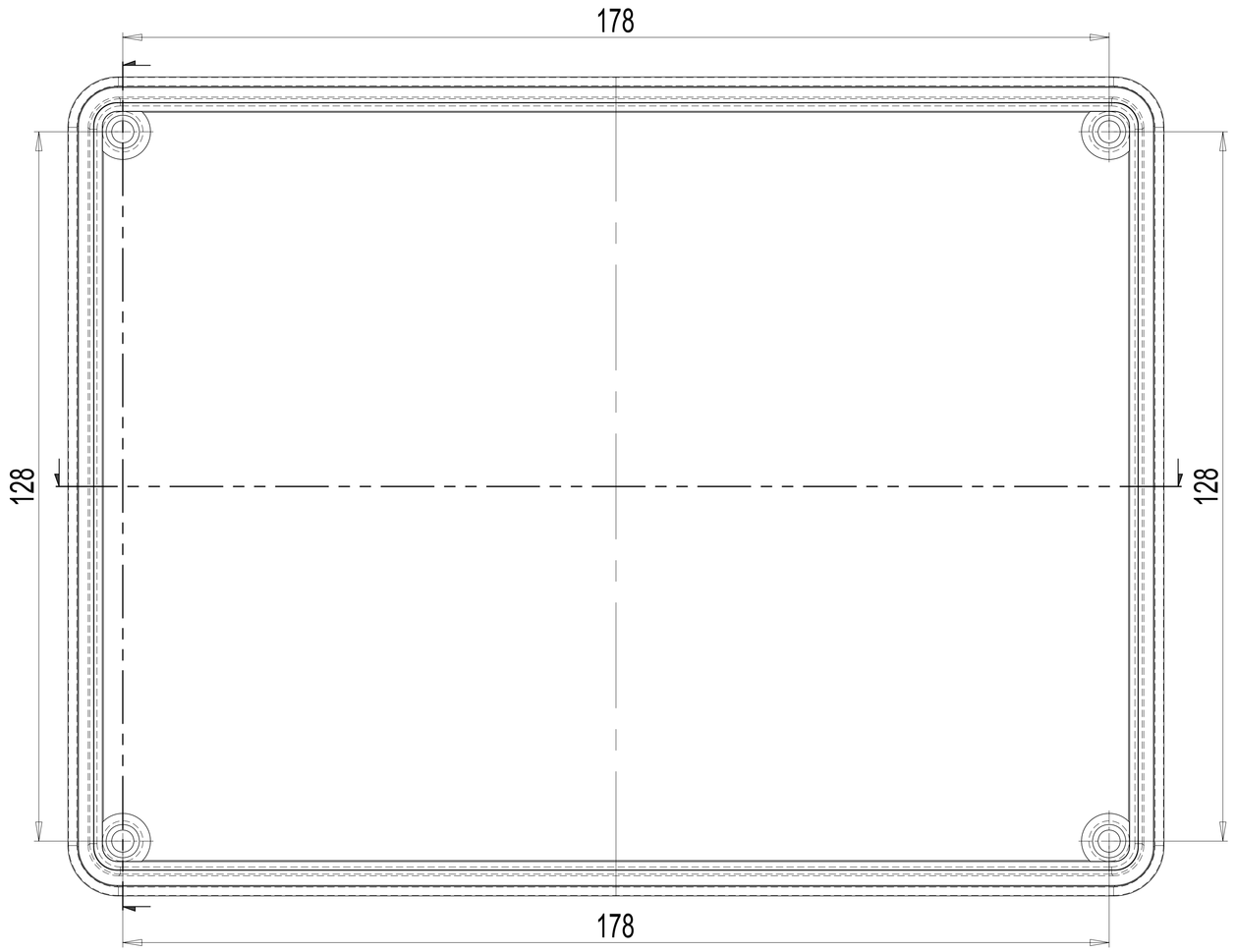

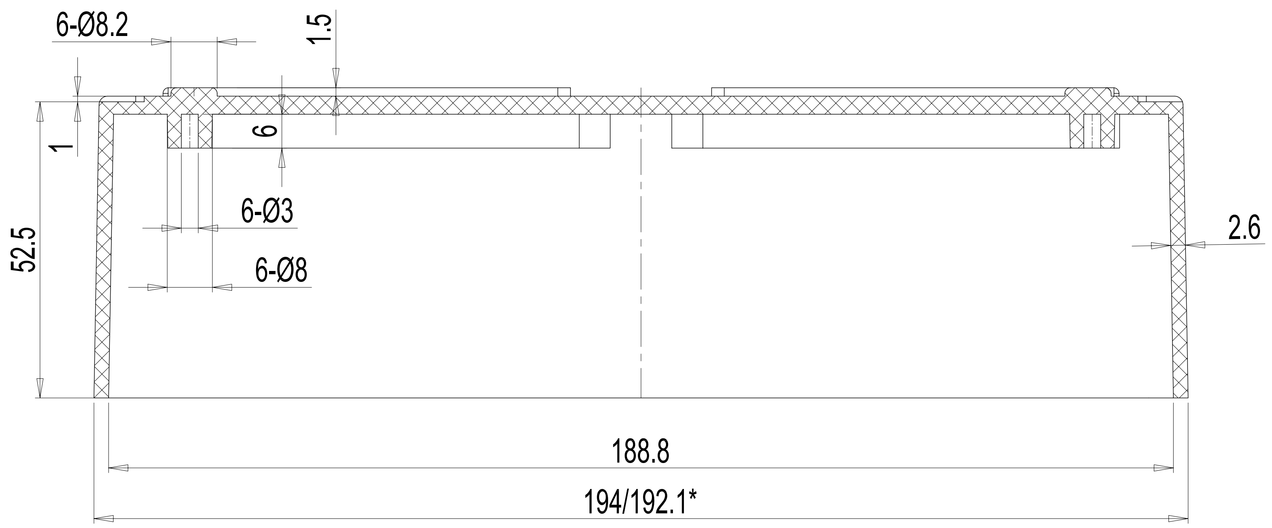

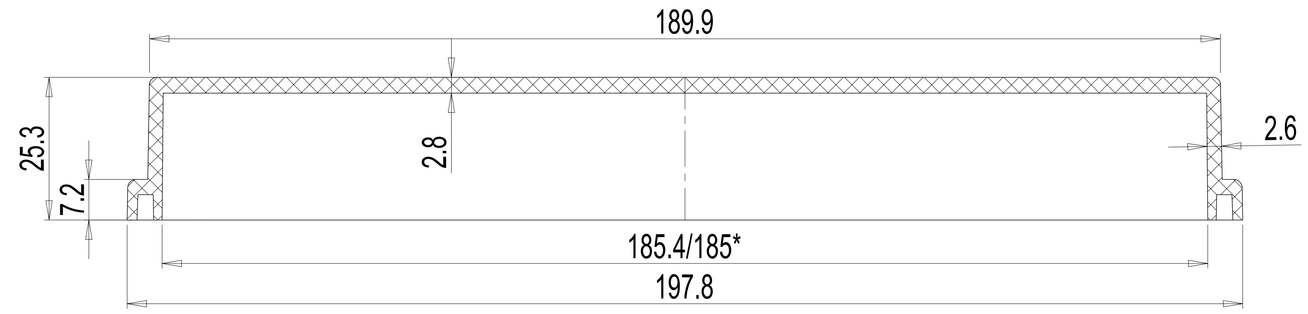

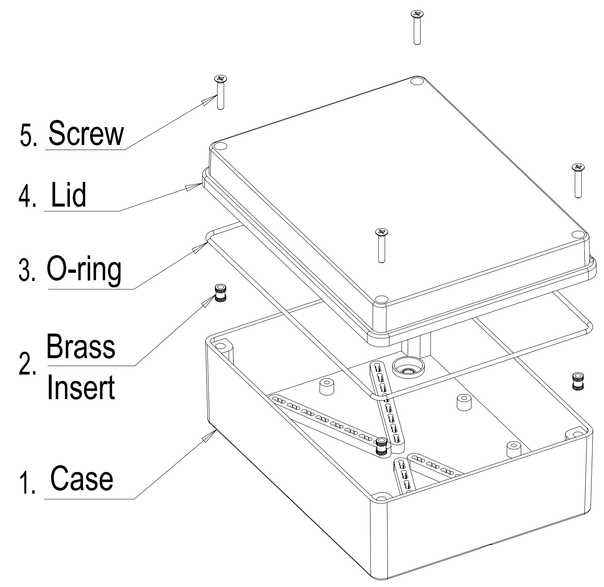

NOTICE

1. * Measures are reduced to below because the draft tolerance after GTA13/5 DIN16901-130;
2. Unmarked Draft 2°.

No.	Name	Qty.	Size	Material
5	Screw	4	M4X20 (DIN 965)	Stainless Steel
4	Lid	1	198X148X25	ABS
3	O-ring	1	Ø3X690	PU
2	Insert	4	M4X8	Brass
1	Case	1	194X144X55	ABS

Index (Customer)	REV	Name	Date	Index (FUXIN)	REV	Name	Date

FUXIN
Metal Processing Co.,Ltd

Scale: Free
Volume: mm³
Weight: 0.332 Kg
Original Material: ABS
Chinese Material:

Tolerances: DIN16901 - 130
Treatment:

Part Name : FUP 194 X 144 X 076

Drawing Number : FUP 194 X 144 X 076

Designer	Liu Junbin	2009.12.11
Technician		
Quality department		

Sheet 1 of 1